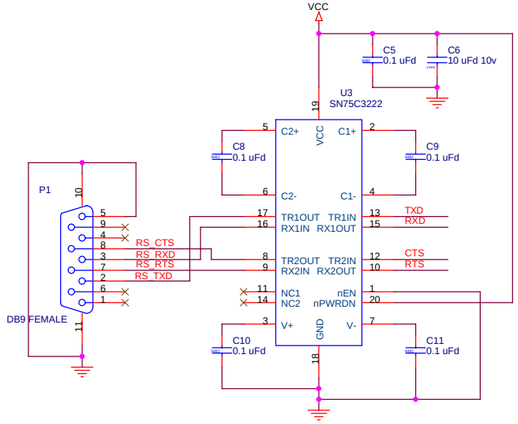

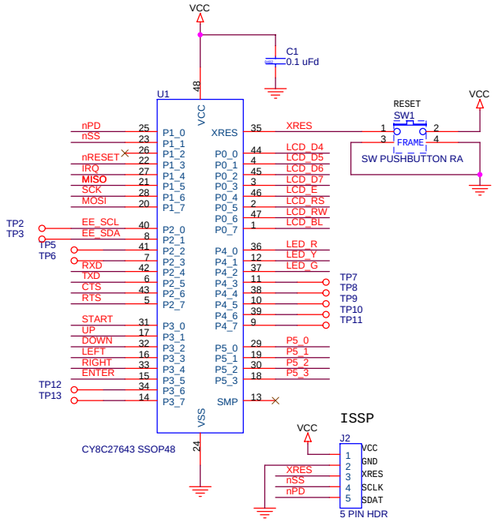

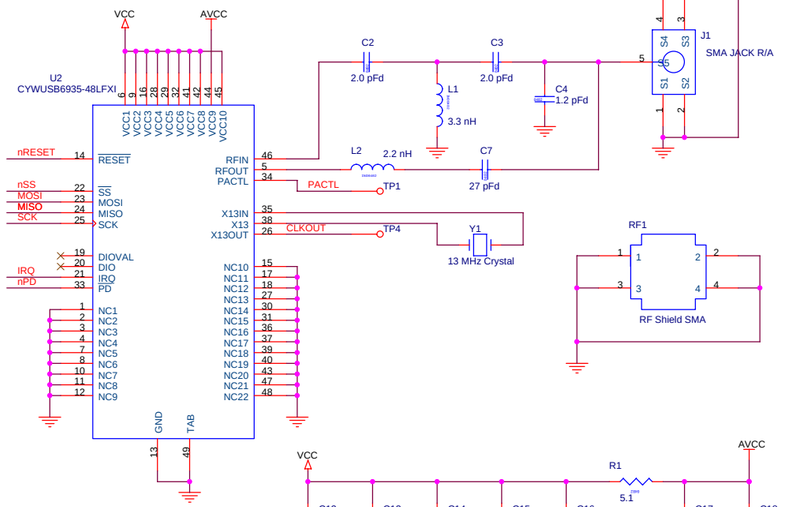

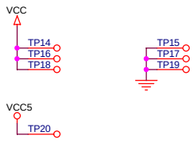

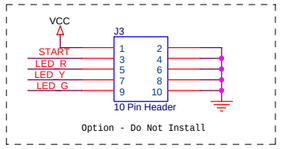

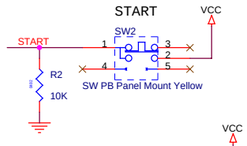

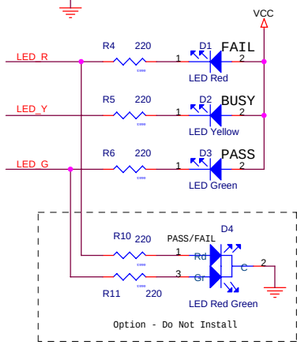

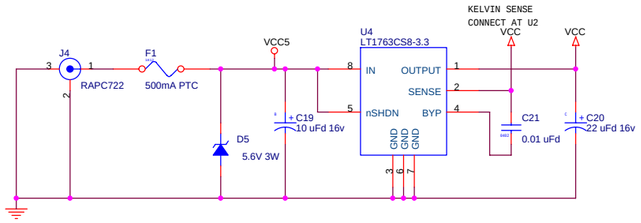

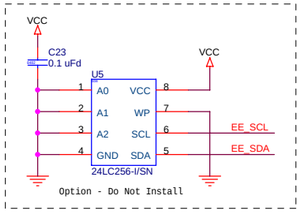

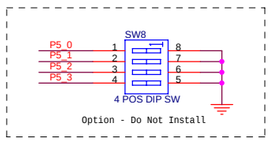

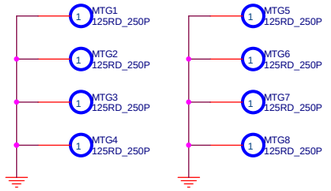

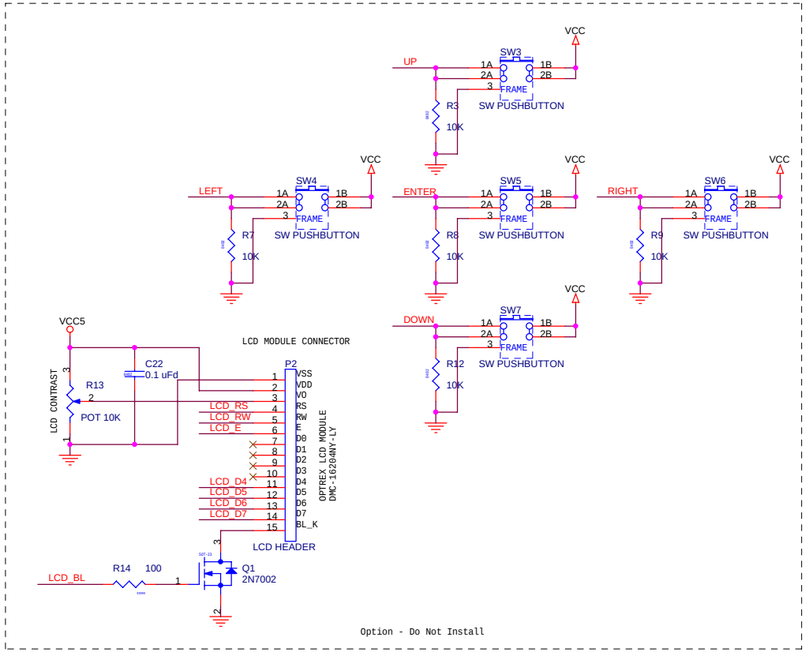

PCB # PDC-9236
PCA # 121-23600

CYPRESS SEMICONDUCTOR © 2005

Title	MTK Test Fixture	
Size C	Document Number REF-13087	Rev *A
Date: Wednesday, March 09, 2005	Sheet 1 of 1	